NiCo

LOAD PRO

3d adjustable door hinge

for fast, precise positioning and fixing

TOP: Loadpro 4915 3D Adjustable Door Hinges in (left to right) white powder coating, Supercoat 500 and yellow zinc.
ABOVE: Polished brass and polished chrome.

The Nico LOADPRO 3D Adjustable Door Hinge is part of the Nico range of heavy duty, maintenance-free door hinges developed for long-life performance under the most arduous conditions.

The 3D Adjustable Door Hinge is the ideal solution for high performance applications. Featuring low-friction bearings for smooth door opening, it offers guaranteed reliable, maintenance-free operation.

The 3D Hinge is available in a selection of corrosion resistant finishes including polished chrome and brass, yellow zinc and Supercoat 500 – tested to over 240 hours salt spray and approved to BS EN1670:1998. It can also be powder coated to any RAL colour on request.

The 3D Hinge is fully adjustable in three directions for precise positioning and fixing. For ease and speed of installation, the patented design allows the hinge to remain fixed to the door during the adjustment process.

The 3D Hinge is also available in an 'Open Out' version for enhanced security.

UK manufacture

Patented innovative design

Low friction bearings

Easy 3D adjustment

Standard and Open Out Options

Choice of finishes, including polished chrome and brass

Complies with BS EN1935:2002

3d adjustable door hinge

Technical Data

The Nico LOADPRO 3D Adjustable Door Hinge features an innovative, patented design that allows independent adjustment in all three axes by 4mm key.

+/– 2.5mm Height
+/– 2mm Side
+/– 2mm Depth (compression)

There are no shims and all adjustments can be carried out in situ.

The Open Out 3D Hinge version is made to order and has a special security feature. This makes it the ideal option for use when the hinge roll is outside the door. Contact the Nico Sales Team for details.

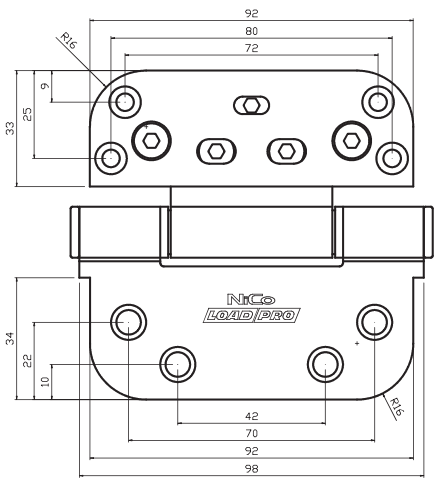

Hinge Side Adjustment

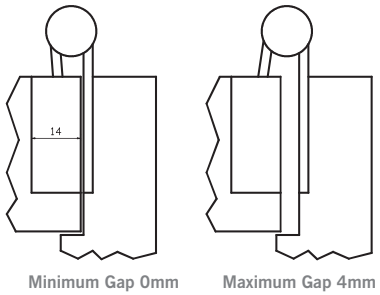

3D Adjustable Hinge

4915 3D Adjustable Hinge: Standard

Finish	Size	Product Code	Max. Adjusted Door Weight	Box Quantity
Yellow Zinc	92 x 92 x 14mm/2.7mm	4915ZY	80kg	10
Supercoat 500	92 x 92 x 14mm/2.7mm	4915S5	80kg	10
White	92 x 92 x 14mm/2.7mm	4915WH	80kg	10
Black	92 x 92 x 14mm/2.7mm	4915BL	80kg	10
Chrome	92 x 92 x 14mm/2.7mm	4915CH	80kg	10
Polished Brass	92 x 92 x 14mm/2.7mm	4915PB	80kg	10

4915 3D Adjustable Hinge: Open Out Door

Finish	Size	Product Code	Max. Adjusted Door Weight	Box Quantity
Yellow Zinc	92 x 92 x 14mm/2.7mm	☎4915SECZY	80kg	10
Supercoat 500	92 x 92 x 14mm/2.7mm	☎4915SECS5	80kg	10
White	92 x 92 x 14mm/2.7mm	☎4915SECWH	80kg	10
Black	92 x 92 x 14mm/2.7mm	☎4915SECBL	80kg	10
Chrome	92 x 92 x 14mm/2.7mm	☎4915SECCH	80kg	10
Polished Brass	92 x 92 x 14mm/2.7mm	☎4915SECPB	80kg	10

Hinge Adjustment Sequence

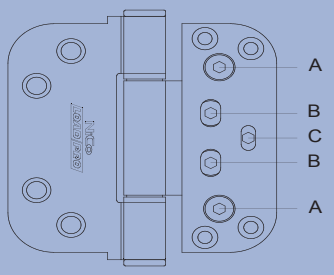

Vertical Adjustment

Slacken 'A' screws on hinges. Adjust door to correct height and retighten screws.

Horizontal Adjustment

Partially slacken 'B' screws on hinge. Turn 'C' screw anticlockwise to move leaves apart and clockwise to bring them together. Retighten 'B' screws after adjustment. NOTE. Hinges supplied set with 2mm hinge gap.

Seal Compression Adjustment

Slacken 'B' screws. Adjust door to correct compression on seal and retighten screws.

☎ Available to order

Products indicated with the Telephone Symbol are available to order only. Please ring for details and lead times.

ISO 9001 Cert No: Q 09355

Nico Manufacturing Ltd
Oxford Road, Clacton-on-Sea
Essex CO15 3TJ, England.
Tel: 01255 422333
Fax: 01255 432909
E-mail: sales@nico.co.uk
Web: www.nico.co.uk